On/off Detector Slim Antenna for Tri-proof light

Model: UC17

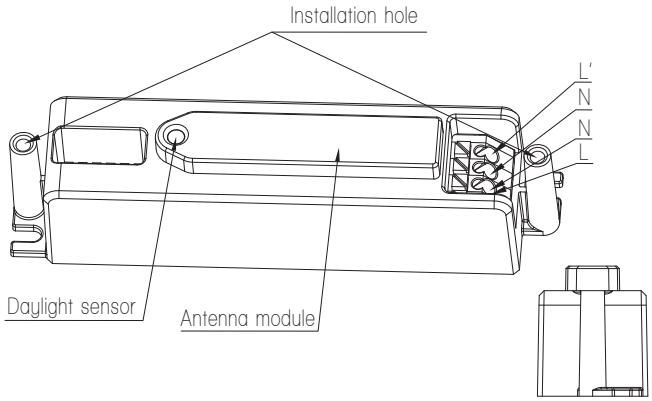

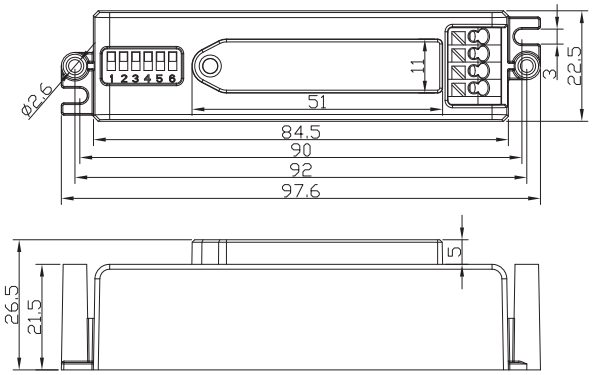

Product Feature

On/off function

The motion detector can turn on the light based on movement. With this detector built in, light is automatically on when needed and off when not needed.

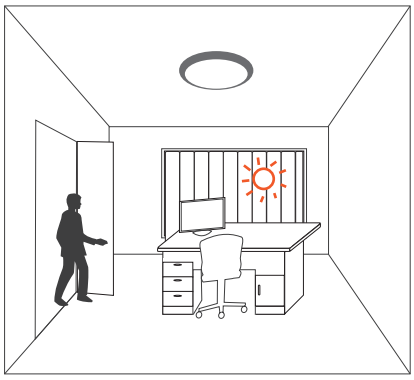

The light keeps off during daytime even when movement is detected. (Ambient lux level is above preset daylight threshold)

With movement and insufficient ambient lux level, the light is triggered on by the detector.

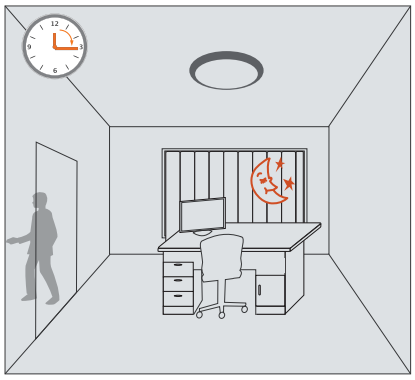

If there is no more movement, the light turns off automatically after hold-time preset.

Wiring

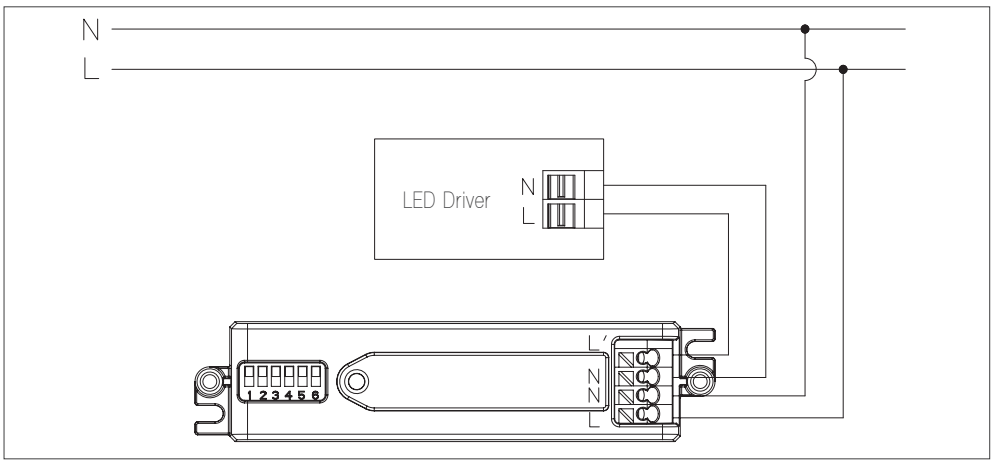

Detection pattern

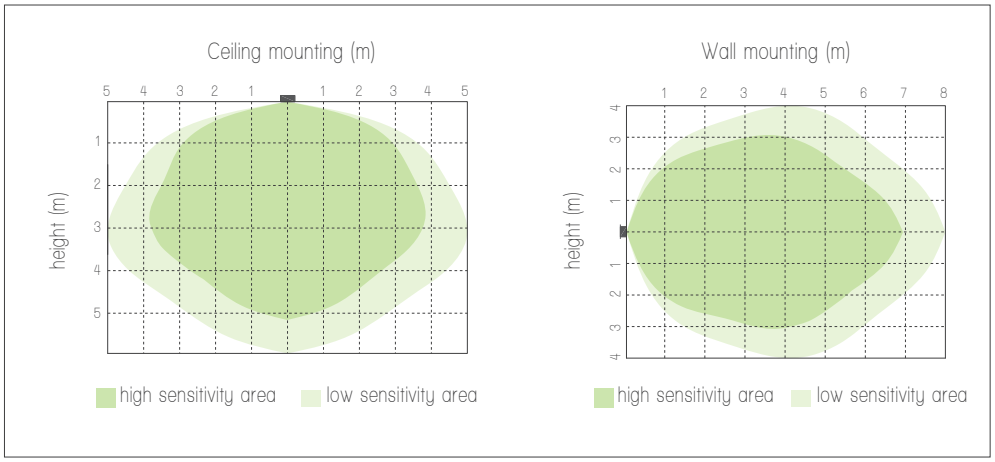

Highlighting

Ultranik's microwave motion sensor uses 5.8GHz high frequency (HF) antenna. With the increasing density of wireless environments such as 5G GSM and 5G Wi-Fi, this has created extra challenges for sensor's operation because the air is shared by all kinds of wireless signals, and transmissions from any device at the similar frequency could potentially cause interference. The effects of interference may cause false triggering of sensors (turning on/off erratically), or lights staying on even after hold time etc.

Now Ultranik has developed a robust HF module, loaded with our own special sophiscated software. This robust HF module can withstand different types of wireless interferences in the real application. We believe this is the ultimate solution towards demanding installation environments in the future.

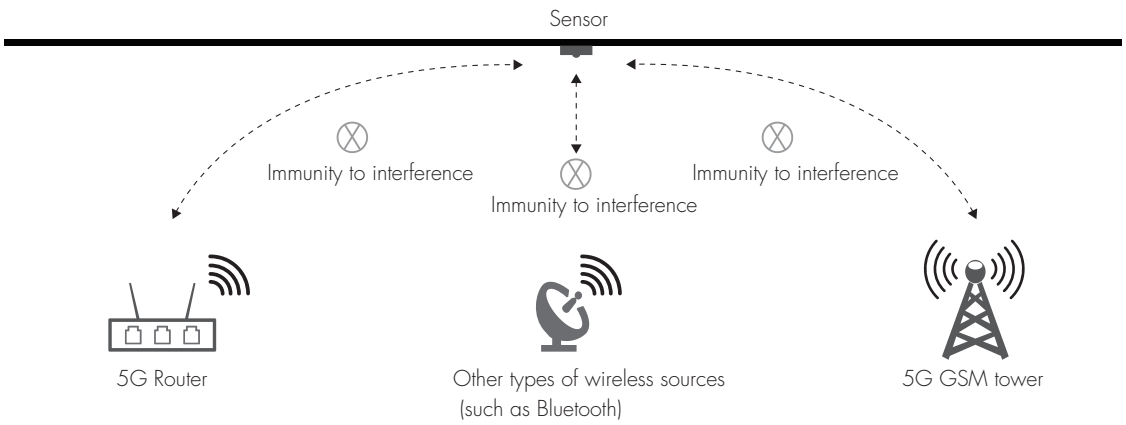

Settings

1. Sensitivity

Sensitivity can be adjusted by selecting the combination on the DIP switches for different applications.

I – 100%
II – 75%
III – 50%
IV – 10%

	1	2	
I	●	●	100%
II	●	○	75%
III	○	●	50%
IV	○	○	10%

2. Hold-time

Hold-time refers to the time period that the light remains 100% on if no more movement is detected.

I – 5s
II – 90s
III – 5min
IV – 15min

	3	4	
I	●	●	5s
II	●	○	90s
III	○	●	5min
IV	○	○	15min

3. Daylight threshold

Different daylight threshold can be preset on DIP switches. Light will always turn on upon movement if daylight sensor is disabled.

I – Disable
II – 50Lux
III – 10Lux
IV – 2Lux

	5	6	
I	●	●	Disable
II	●	○	50Lux
III	○	●	10Lux
IV	○	○	2Lux

Specification

Operating voltage	100 ~ 240 VAC 50/60Hz
Rated load	400W (Capacitive load) 800W (Resistive load)
Stand-by power	<0.5W
Sensitivity	10% / 50% / 75% / 100%
Hold-time	5s / 90s / 5min / 15min
Daylight sensor	2lux / 10lux / 50lux, disable
Microwave frequency	5.8 GHz +/- 75MHz
Transmitting power	<0.2mW
Detection range	Max. installation height: 6m Max. detection range: Ø 10m @ 3m installation height
Detection angle	30° ~ 150°
Working temperature	-20°C ~ 60°C
IP rating	IP20
Certificate	CE, RCM, RED