Zhaga Book18 HighBay PIR Sensor
0-10V Dimming Control IP65

Model:UM14/PIR

Mechanical structure (mm)

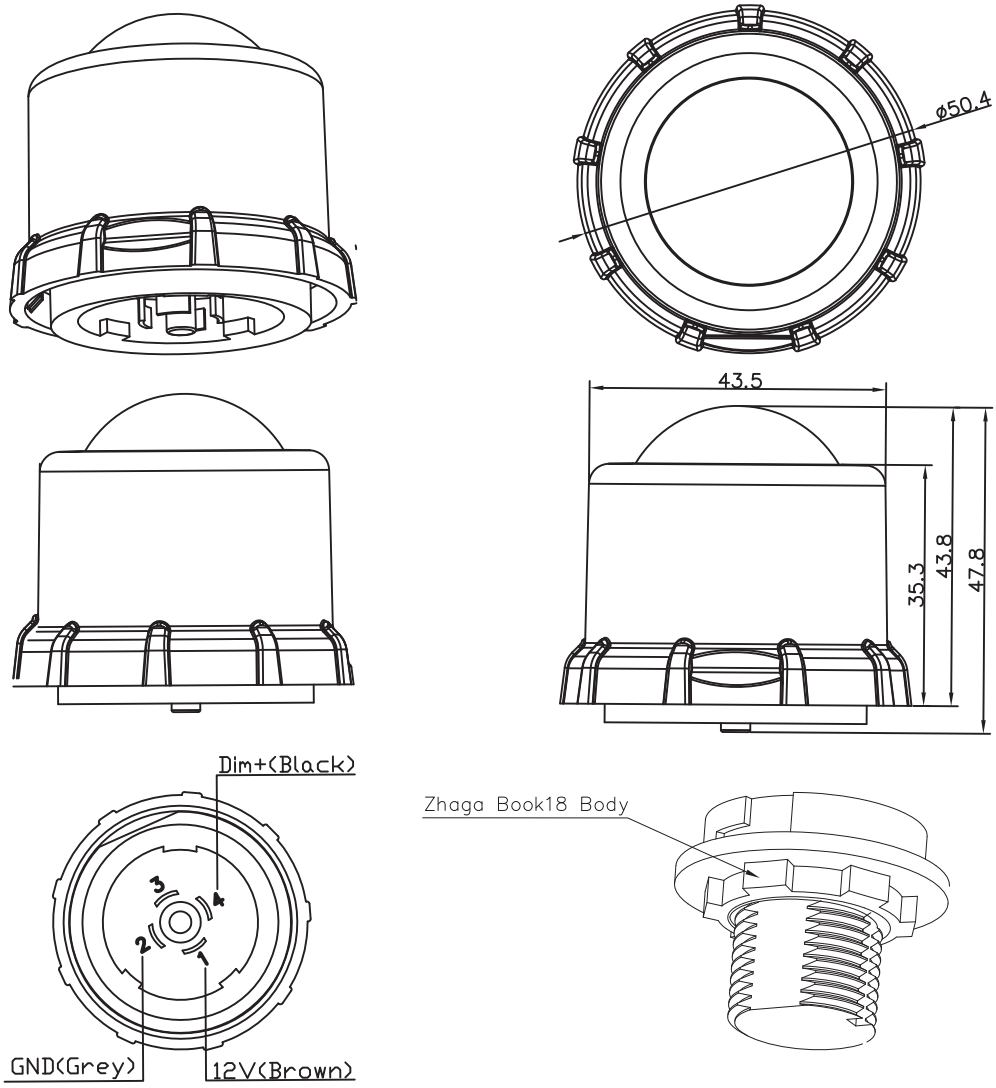

Product Feature

Step-dim function

The motion detector can turn on the light based on movement. With this detector built in, light is automatically on when needed and dimmed to preset level before it is totally off.

The light keeps off during daytime even when movement is detected. (Ambient lux level is above preset daylight threshold)

With movement and insufficient ambient lux level, the light is triggered on 100% by the detector.

If there is no more movement, the light dims to stand-by dimming level after hold-time.

The light turns off automatically after stand-by time.

Wiring

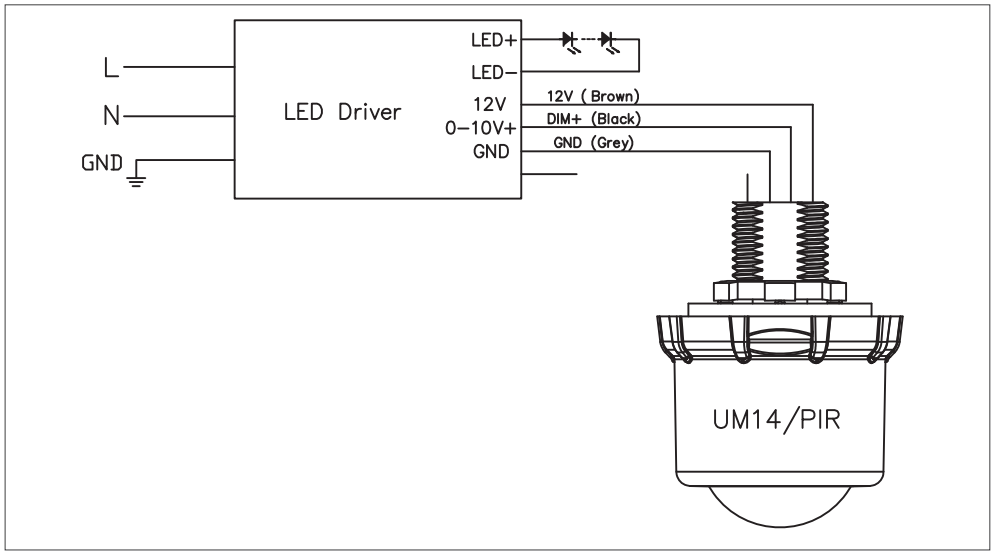

Detection pattern

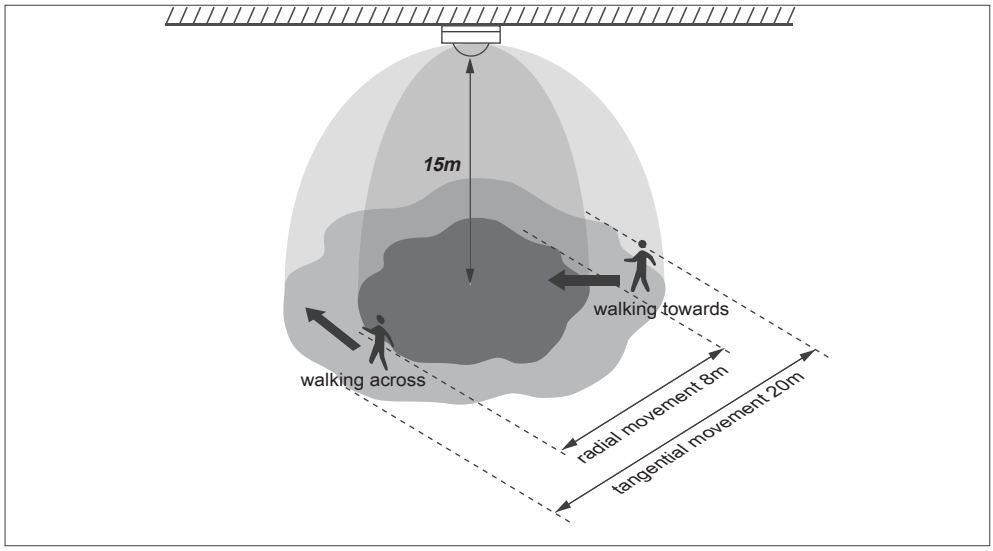

Remote controller HRC-05

HRC-05

Permanent ON/OFF function

Press the "ON/OFF" button, the light goes to permanent on or permanent off mode.
* Press "Auto Mode", "RESET" or "Scene mode" buttons to quit from this mode.

Sensor mode

Press "Auto Mode" button, the sensor starts to work and all settings remain the same as the last status before the light was switched on/off.

Reset function

Press "RESET" button, all settings go back to the value of detection range-100%, hold time-10min, standby period-10min, standby dimming level-10%, daylight sensor-disable

Dim +/-

Short press "Dim +" or "Dim - " to adjust the light brightness during hold-time. " + " means dimming up, " - " means dimming down.

Test mode

The button "Test 2s" is for testing purpose only. The sensor goes to test mode (hold-time is 2s) automatically after commissoning, meanwhile the stand-by period and daylight sensor are disabled.
* This mode can be ended by pressing "reset", or any button of "scene mode" and "hold time". The sensor setting is changed accordingly.

Power output

Press these buttons to select full output level. 80% button allows for energy saving and reverse dimming to compensate for LED lumen depreciation over time. Supports fluorescent 10,000 hr initial burn-in.

Lux disable

Press this button to disable the daylight sensor for threshold control. When motion is detected, the fixture will always turn ON, regardless of ambient light level.

Scene mode

There are four scene modes fixed programs built-into the remote control. Select as appropriate. Each scene can be modified using the remote. The sensor will remember updates even after power outage. The green "RESET" button on remote reverts to original defaults.

Scene options	Detection range	Hold-time	Stand-by period	Stand-by dimming level	Daylight sensor
SC1	100%	1min	10min	10%	2Lux
SC2	100%	5min	10min	10%	2Lux
SC3	100%	10min	30min	10%	10Lux
SC4	100%	10min	+∞	10%	50Lux

Note: end-user can adjust the settings by pressing buttons of detection range / hold-time / stand-by period / stand-by dimming level/daylight sensor. The lastest setting stays in validity.

Detection range

Select as appropriate to adjust/reduce sensor sensitivity, detection range 100%, 50%, 10%. Please refer to detection pattern.

Hold-time

Hold-time refers to the time period that the light remains 100% on if no more movement is detected.

Daylight sensor

Select daylight sensor threshold level at MIN 2 LUX. Ambient light must below this MIN LUX threshold for sensor to turn fixture ON. Press Blue button to sample ambient light. Press Lux Disable button for fixture to always turn On when motion is detected.

Stand-by period (tri-level control)

Press the buttons of "stand-by period" to set stand-by period at 0s / 10s / 1min / 10min / 30min / +∞.
Note: "0s" means on/off control; "+∞" means bi-level control, light never switches off .

Stand-by dimming level

Press the buttons of "stand-by dimming level" to set the stand-by dimming level at 10% / 20% / 30%.

Specification

Operating voltage	12VDC(⩾15mA)
Control Method	0-10V
Sensitivity	10% / 50% / 100% (Remote controller HRC-05)
Hold-time	2s / 30s / 1min / 5min / 10min / 30min (Remote controller HRC-05)
Stand-by time	0s / 10s / 1min / 10min / 30min / +∞ (Remote controller HRC-05)
Stand-by dim level	10% / 20% / 30% (Remote controller HRC-05)
Daylight sensor	2 ~ 50lux, disable (Remote controller HRC-05)
Warming-up period	30s
Detection range	Max. installation height: 15m Max. detection range: Ø 20m
Detection angle	360°
Working temperature	-25° ~ +50°C
Working humidity(RH%)	≤90
IP rating	IP65